Magnet

A substance that attracts the iron pieces is called a Magnet. The phenomenon by which this attraction takes place is called Magnetism. Certain type of iron ore, known as **Magnesia,** which has the properties of attracting and holding small pieces of iron. This ore is now called as Magnetite (Fe_2O_4).

The magnets are classified into two types

1. Natural magnets
2. Artificial magnets

1. Temporary magnets
2. Permanent magnets

Properties of magnet

The magnets have their own properties and are as follows:

(a) A magnet has two poles viz. The **north pole and South pole**.

(b) The two poles of the magnet have equal strength.

(c) The poles of a magnet cannot be separated i.e., Isolated pole does not exist.

(d) Like poles repel each other and unlike poles attract each other.

Magnetic Field

"The space or region around the magnet where its poles exhibit a force of attraction or repulsion is called magnetic field."

The magnetic field due to a magnet is strongest near the poles and becomes weak at the center of the magnet.

Magnetic Line of Force:

"It is the imaginary line drawn in the path traced by a unit North pole moved if free to do so.

For Example: If we place a piece of cardboard on the top of a bar magnet and iron filings are sprinkled over it, they tend to align themselves, as shown in Figure. We can notice that each little splinter of iron filing are attracting another filing in great quantities to regions near the ends of the bar and repelling those lying parallel to it. It is because of the existence of magnetic force around the magnet. These filings set themselves in definite paths or lines from one pole to the other and are

termed as '**magnetic lines of force**. The stronger the magnet, the greater is the number of these magnetic lines of force

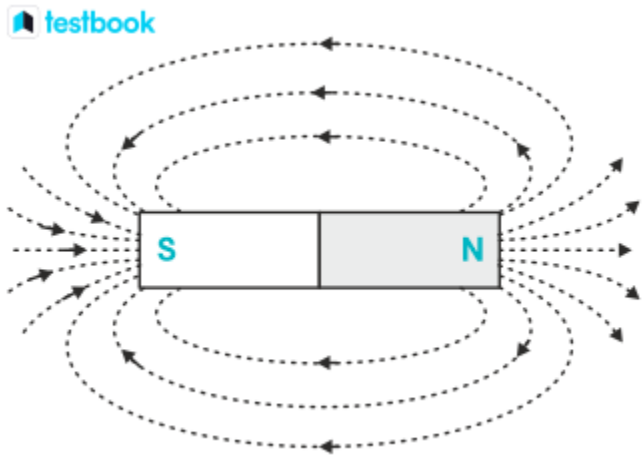

The existence of the magnetic field at a point around the magnet can also be determined by placing a magnetic needle force of action is from one pole, through space, around to the other pole in a definite direction. The end of the magnet from which the magnetic compass needle points is called the North pole and the other end is called the South pole. It is easy then to think of these magnetic lines as coming out of a North pole, going around the magnet into the South pole.

Magnetic Flux (Φ)

The total number of lines of force in a magnetic field is called the magnetic flux. It is denoted by the Greek letter **Φ** (phi). The unit of magnetic flux in the S.I. system is weber (Wb). in C.G.S it is measured in maxwell.

1 wb = 108 Lines of Force.

$$\text{Flux},(\Phi)=\frac{\text{m.m.f}(N\times I)}{\text{Reluctance}(S)},\text{wb}$$

Magnetic flux density (B)

Magnetic flux density at any point is the magnetic flux passing per unit area of a surface at right angles to the magnetic field. It is denoted by the letter '**B**'.

Magnetic Flux density or the Magnetic Flux Area is the amount of flux passing through a defined area that is perpendicular to the direction of the flux, i.e.

Mathematically, this is defined as

Where,

B = Magnetic flux density (tesla)

Φ = Magnetic Flux (weber, Wb)

A = Area (m^2)

SI unit of the magnetic flux density (B) is Tesla (T).

1 Tesla is equivalent to 1 Weber/meter² (Wb/m²)

The CGS unit of Flux Density is gauss where 1 gauss = 10-4 Tesla

$$\text{MagneticFluxDensity} = \frac{\text{MagneticFlux}}{\text{Area}}$$
$$B = \frac{\Phi}{A}$$

Magnetizing Force or Magnetic Field Intensity (H)

"Field intensity at any point in a magnetic field is the force acting on a unit N-pole, placed at that point". It is represented by 'H' and is measured in newton's per weber or ampere - turn per meter.

units

$$\text{MagnetizingForce}, H = \frac{\text{magnetomotiveforce(m.m.f)}}{\text{meanlength}}$$
$$H = \frac{N \times I}{l} = AT/m$$

Permeability (μ):

"The ability of a material to conduct magnetic flux through it is called 'Permeability of the material". It is represented by the Greek letter 'μ' (mu). It is similar in many respects to conductivity in electrical circuits. Permeability is a measure of the receptiveness of a material to having magnetic flux set up in it. For a free space or vacuum, the **absolute permeability** μ of a

material is represented by μ0.

Absolute permeability in a free space or vacuum,

Relative Permeability (μr)

The ratio of the permeability μ of a material to the permeability of free space ' μ0 is called its relative permeability. It is represented by the letter μr

and

Hence the absolute permeability of a material can also be expressed in terms of its relative permeability and the permeability of free space. Obviously, the relative permeability of air would be = 1

Relation between B, H, and µr

The flux density B produced in a material is directly proportional to the magnetising force H. In other words, the greater the magnetizing force, the greater the flux density.

B∝H$_{\text{B}}$∝$_{\text{H}}$

Mathematically,

BH=constant=µ$_{\text{B}}$$_{\text{H}}$=$_{\text{B}}$$_{\text{H}}$=µ B=µ×H$_{\text{B}}$=µ×$_{\text{H}}$

where µ is a constant and is called the permeability of the material.

But, µ=µr×µ0µ=µ$_{\text{B}}$×µ0 B=µr×µ0×H$_{\text{B}}$=µ$_{\text{B}}$×µ0×$_{\text{H}}$

Therefore,

Magneto Motive Force (m.m.f):

Magneto Motive Force is the force, which drives or tends to drive the magnetic flux through a magnetic circuit like electromotive force in an electrical circuit.

For example, an m.m.f. is produced in a solenoid when electric current flows in a coil of several turns. This m.m.f. is measured by the product of current in amperes and the number of turns.

m.m.f = Number of turns x current

= N x I

Reluctance (S)

"Reluctance is the property of the substance, which opposes the flow of magnetic flux through it". It is analogous to the resistance in an electrical circuit. Its denoted by the letter 'S' and is measured in ampere - Turn per weber (AT/wb).

Reluctance of any part of a magnetic circuit is also defined as the ratio of the drop in magneto motive force to the flux produced in that part of the circuit.

$S = m.m.f flux = N \times I / \Phi = AT/wb$

Reluctance,

Reluctance of the magnetic circuit depends upon

(i) Nature of the material, I.e. μ0 and μr

(ii) Length of the magnetic path, i.e. '*l* ', and

(iii) Cross-sectional area of the material, i.e. 'a'

Mathematically, $S = l\mu \times A = l\mu_0 \times \mu_r \times A = ATwb$

Permeance

"It is the measure of the ease with which magnetic flux lines can be established in the material".

It is just reciprocal of the reluctance of the material and is measured in wb/AT. or henry. It is denoted by the letter 'P'.

$Permeance = 1 Reluctance \quad P = \mu_0 \times \mu_r \times AlwbAT = \mu 0 \times \mu$

Permeance is analogous to conductance in an electrical circuit.

Types of Magnetic Circuit

There are two types of magnetic circuits –

- Series Magnetic Circuit
- Parallel Magnetic Circuit

Series Magnetic Circuit

When the same magnetic flux ψ flows through each part of the magnetic circuit, then the circuit is called as *series magnetic circuit*.

Consider a *composite series magnetic circuit* (a series magnetic circuit that has parts of different dimensions and materials is called a composite series magnetic circuit) consisting of two different magnetic materials of different relative permeability. Each part of this series magnetic circuit will offer reluctance to the magnetic flux

ψ. Since the different parts of the magnetic circuit are in series, the total reluctance is equal to the sum of reluctances of individual parts.

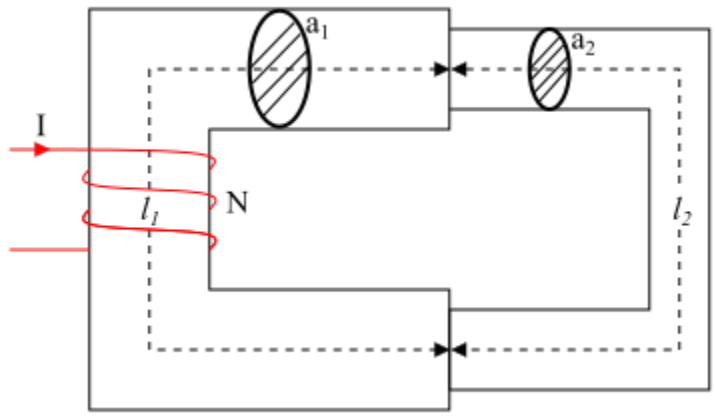

Referring the figure of series magnetic circuit, we have,

$$\text{TotalReluctance}, S_T = l_1\mu_0\mu_{r1}a_1 + l_2\mu_0\mu_{r2}a_2$$

$$\text{TotalMMF} = \text{Magneticflux} \times \text{TotalReluctance}\text{TotalMMF} = \text{Magneticflux} \times \text{TotalReluctance}$$

$$\Rightarrow \text{TotalMMF} = \psi(l_1\mu_0\mu_{r1}a_1 + l_2\mu_0\mu_{r2}a_2) \Rightarrow$$

$$\Rightarrow \text{TotalMMF} = (B_1\mu_0\mu_{r2}) \times l_1 + (B_2\mu_0\mu_{r2}) \times l_2 \Rightarrow$$

$$\Rightarrow \text{TotalMMF} = H_1 \times l_1 + H_2 \times l_2 \Rightarrow$$

Therefore, total MMF required to set up the magnetic flux in a series magnetic circuit is the sum of MMF required by individual parts of the circuit.

Parallel Magnetic Circuit

A magnetic circuit which has more one path for the magnetic flux is called as parallel magnetic circuit.

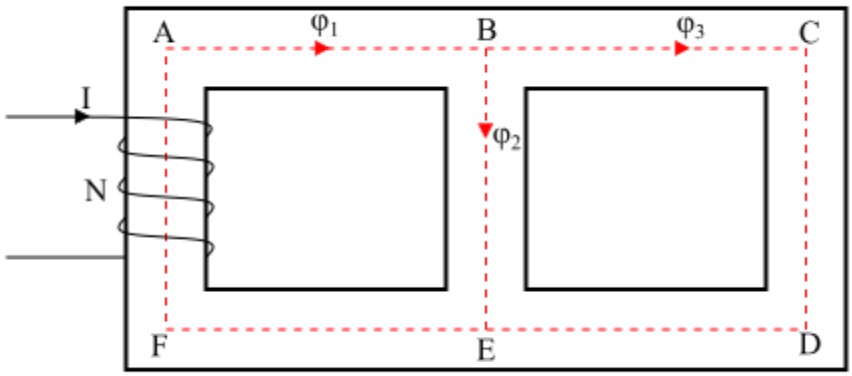

Consider a coil of N turns wound on limb AF carries an electric current of I amperes. The magnetic flux φ_1 set up by the coil divides at B into two paths viz. –

- The magnetic φ_2 passes along the path BE.
- The magnetic flux φ_3 passes along the path BCDE.

Therefore, the total flux is,

$$\varphi_1=\varphi_2+\varphi_3$$

The path BE and BCDE are in parallel and hence form a parallel magnetic circuit. In a parallel magnetic circuit, the MMF required for the whole parallel magnetic circuit is equal to MMF required for any one of the parallel paths.

Let

$$S_1=\text{Reluctance of magnetic path ABEF}$$

$$S_2=\text{Reluctance of magnetic path BE}$$

$$S_3=\text{Reluctance of magnetic path BCDE}$$

Therefore,

$$\text{Total MMF}=\text{MMF for path ABEF}+\text{MMF for path BE or BCDE}$$

$$\Rightarrow \text{Total MMF}=\varphi_1 S_1+\psi_2 S_2+\varphi_3 S_3$$